EXXEL PACIFIC
GENERAL CONTRACTORS

Request For Information - 054

The Cora Apartments (19 W Harrison)

DATE: 11/23/2016

To:	**John Whitlow**	**From**	**Jola Bielecki**
	VIA Architecture 1809 7th Avenue, Suite 800 Seattle, WA 98101		The Cora Apartments (19 W Harrison) 19 W Harrison Seattle, WA 98109
Phone:	206-995-8872	**Phone:**	425-502-1573
Fax:		**Fax:**	360-671-7616
Email:	jwhitlow@via-architecture.com	**Email:**	JolaB@exxelpacific.com
CC:			

Subject:	**ADA Clearances in Kitchens & Bathrooms, Grab Bars**	**Status:**	**Open**
Drawing #:	A0201, A0202, A0204, A0611, A0613, A0615, A0616, A0617, ID302, ID319	**Spec Sect #:**	
Addendum:		**Submittal #:**	12 3000-03 R1 Manufactured Casework for Units - Shop Drawings

Potential Schedule &/or Cost Impacts:

Schedule Impact (days): TBD
Cost Impact: Yes

Information Requested: **Date Required: 11/30/2016**

Per the e-mail from John W./VIA on 11/18-16, please confirm the distance from the wall projection (2" is needed for the tub flange nailing) to the centerline of the toilet in type B bathrooms.

Per your comments on the cabinet shop drawings (12 3000-03 R1 Manufactured Casework for Units), please confirm that the entire Casework in Unit H Type B needs to be flipped to comply with ADA requirements at the Range 30x48 clearance box.

Please verify whether the grab bars have to be installed in the Units type A bathrooms, or just the in-wall blocking for the future installation, as shown on A0901. If the grab bars have to be installed in accessible bathrooms in the Retail space (C02) and in the Common Area (108), please provide the interior elevations showing the specific location.

Please verify the min. distance from the corner of the "U" and "L" shaped kitchens (type B) to the countertop electrical outlets.

Suggestion:

Requesting Firm: Exxel Pacific, Inc.

Submitted By: *Jola Bielecki*

Response:

Date	Response
11-29-2016	#1 - If wall at tube flange needs to move 2" into the required 33" clear space for the Toilet then the Toilet will need to move 2" toward the Cabinet and the Cabinet will need to be reduced in width by the 2" #2 - Owner has approved flipping the Type H Unit (Type B) kitchens due to required ADA clearances at the Range. (Units 313 and 713) #3 - No Grab Bars to be installed in the Type A Units. Wall blocking to be installed in all Units. #4 - Distance governed by Electrical code. Design Build Electrical sub to determine. JXW

Jola Bielecki

From: John Whitlow <jwhitlow@via-architecture.com>
Sent: Friday, November 18, 2016 3:00 PM
To: Jola Bielecki
Cc: Cora Team; Heath Merrigan; Leyland Rudholm; Maria Barrientos; John Links
Subject: RE: Cora Apartments - Clearance at Tubs/Toilet

Follow Up Flag: Follow up
Flag Status: Completed

Jola,
The Toilet would need to move (East) 2" and the Sink Cabinet would need to be reduced to a 36" Cab.
We have to maintain a 33" clear space for the Toilet wall, and the Toilet must be 16" away from the Tub wall.
Additionally the sink needs to be 24" from centerline to face of wall within the Cab.

Thanks

John X Whitlow, AIA | Technical Architect | VIA Architecture | 206 812 1943 | vcard

---

From: Jola Bielecki [mailto:JolaB@exxelpacific.com]
Sent: Friday, November 18, 2016 11:08 AM
To: John Whitlow <jwhitlow@via-architecture.com>
Cc: Cora Team <CoraTeam@exxelpacific.com>; Heath Merrigan <HeathM@exxelpacific.com>; Leyland Rudholm <LeylandR@exxelpacific.com>
Subject: Cora Apartments - Clearance at Tubs/Toilet

John,

Please see the attached marked up bathroom plan at Unit type F. The sub will need an extra 2" of the wall space for the tub installation (to allow for the flange). We have a few cases like that, Unit F is just one example. Please verify if the required 1'-6" is measured from the edge of the tub or from the wall (at 2" projection) to the centerline of the toilet.

We can issue an RFI if needed.

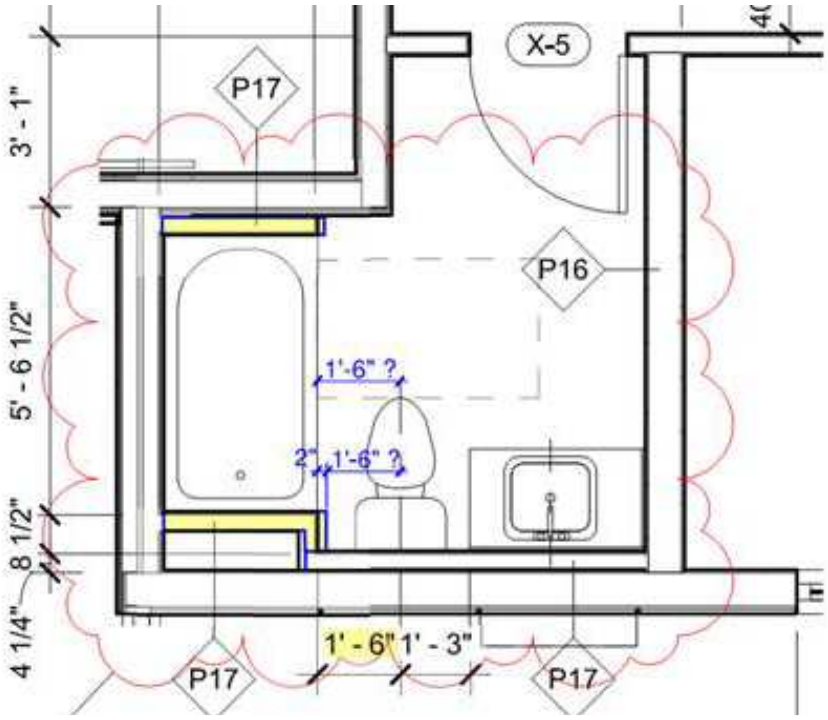

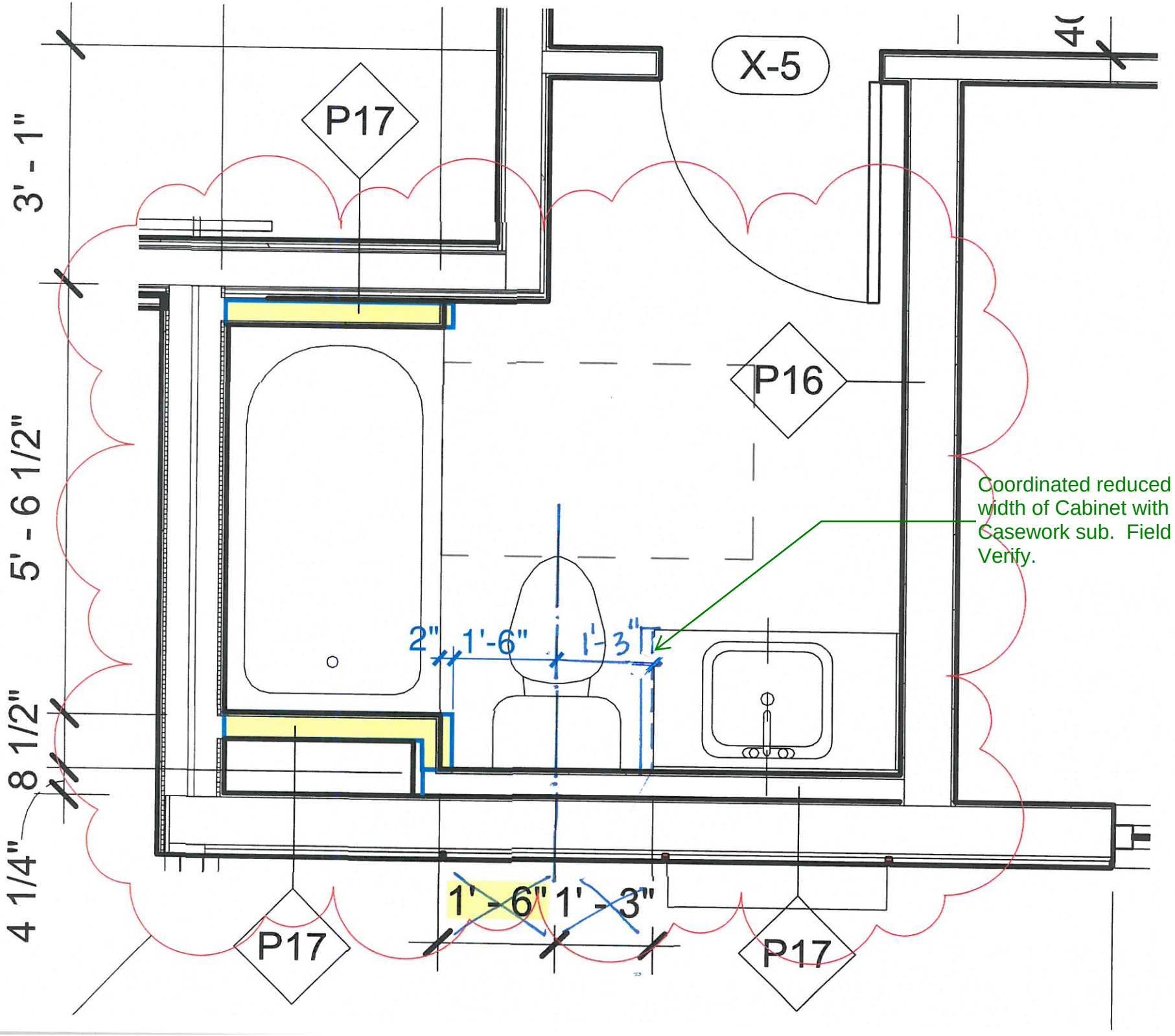
X-5
P17
P16
P17
P17
3' - 1"
5' - 6 1/2"
8 1/2"
4 1/4"
2"
1'-6"
1'-3"
1' - 6"
1' - 3"
Coordinated reduced width of Cabinet with Casework sub. Field Verify.

NOTE: REFER LANDSCAPE DRAWINGS FOR DETAILS OF STREET LEVEL AND ROOFTOP LANDSCAPE TREATMENT

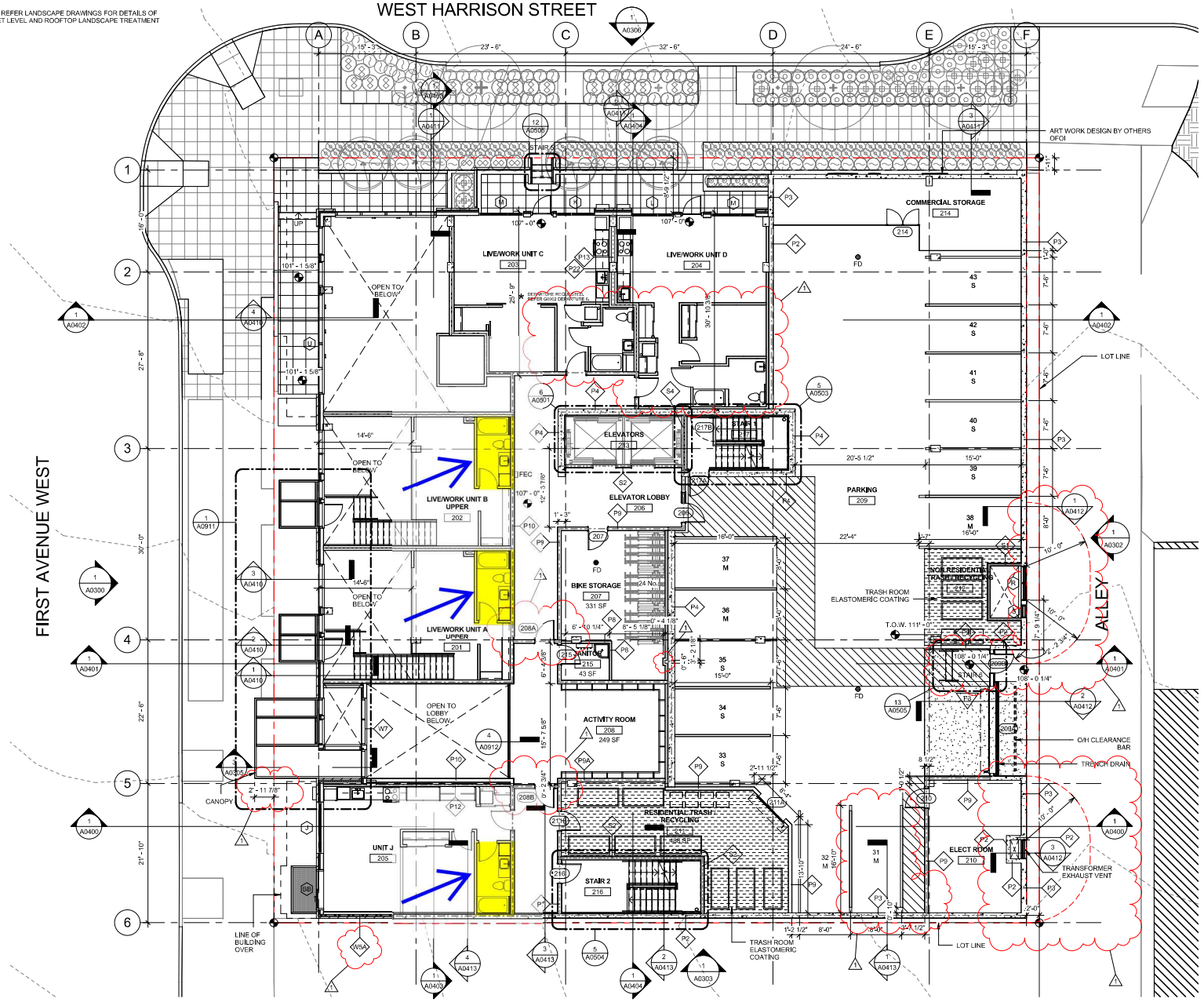

LEVEL 2

1/8" = 1'-0"

WALL LEGEND

- 1-HR FIRE PARTITION, SEE A1011
- 1-HR FIRE PARTITION, SEE A1011
- 2-HR FIRE BARRIER, SEE A1011
- 3-HR FIRE BARRIER, SEE A1011
- P1 — WALL ASSEMBLY TAG, SEE A1000
- P1 C5 — STACKED WALL ASSEMBLY TAG

PLAN SYMBOLS

- FEC — FIRE EXTINGUISHER AND CABINET
- STACKED WASHING MACHINE & ELEC. DRYER. VENT DRYER TO EXTERIOR
- SIDE BY SIDE WASHING MACHINE AND ELEC. DRYER. INSTALL WASHER TO LEFT. VENT DRYER TO EXTERIOR
- BICYCLE RACK
- RESIDENT STORAGE LOCKER; TOP OF LOCKER MINIMUM 18" BELOW SPRINKLER DEFLECTOR
- ROOF DRAIN AND OVERFLOW, SEE PLUMBING
- GARAGE FLOOR DRAIN, SEE PLUMBING
- FD — FLOOR DRAIN, SEE PLUMBING
- ROOF ANCHOR
- ELASTOMERIC COATING PER BEE WP DWGS
- DS — DOWNSPOUT

GENERAL PLAN NOTES:

1. PROVIDE AND VERIFY A 4" CLR DIM BETWEEN ROUGH OPENING AND NEAREST PERPENDICULAR WALL @ ALL INTERIOR DOORS UNO

FIRE RESISTIVE CONSTRUCTION NOTES:

1. MECHANICAL, ELECTRICAL & PLUMBING SUB-CONTRACTORS TO COMPLY W/FIREBLOCKING & FIRE STOPPING REQUIREMENTS @ ALL PENETRATIONS OF RATED WALL, FLOOR-CEILING & ROOF-CEILING ASSEMBLIES.
2. ALL SEMI-RECESSED OR RECESSED FIRE EXTINGUISHER CABINETS SHALL BE UL LISTED FOR USE IN 1-HR OR 2-HR FIRE RESISTIVE CONSTRUCTION OR WRAP INSIDE OF STUD SPACE W/5/8" TYPE X GWB (FIRETAPED) IF ALLOWED BY GOVERNING BUILDING OFFICIAL/INSPECTOR.
3. SEE A0902 FOR ACOUSTIC DETAILS.

VIA

VIA Architecture | www.via-architecture.com
1809 7th Avenue Ste. 800 Seattle WA 98101
tel 206 284 5624 fax 206 624 5624

CONSULTANT

PROJECT
19 W Harrison

Seattle, WA 98119
76114

OWNER
19 W Harrison LLC

PROFESSIONAL SEAL
7888 REGISTERED ARCHITECT Alan Hart STATE OF WASHINGTON

DESIGN TEAM
JB

PRINCIPAL
JB

PROJECT MANAGER
PN

PROJECT ARCHITECT
PN

DRAWN BY
SM

QA CLEAN BY

DRAWING SET DESCRIPTION
ISSUED FOR CONSTRUCTION

REVISIONS

No.	DATE	DESCRIPTION
1	02/12/2016	POST-GMP REVISIONS

SHEET TITLE
LEVEL 2 FLOOR PLAN

SHEET NUMBER
A0202

ISSUE DATE
02.12.2016

ALL RIGHTS RESERVED BY VIA ARCHITECTURE INCORPORATED. THIS DESIGN IS NOT TO BE USED OR REPRODUCED WITHOUT THE CONSENT OF VIA ARCHITECTURE INCORPORATED.

DPD STAMP

NOTE: REFER LANDSCAPE DRAWINGS FOR DETAILS OF STREET LEVEL AND ROOFTOP LANDSCAPE TREATMENT
ACCESS TO LEVEL 3 COURTYARD FOR GARDEN MAINTENANCE IS VIA ALLEY ONLY

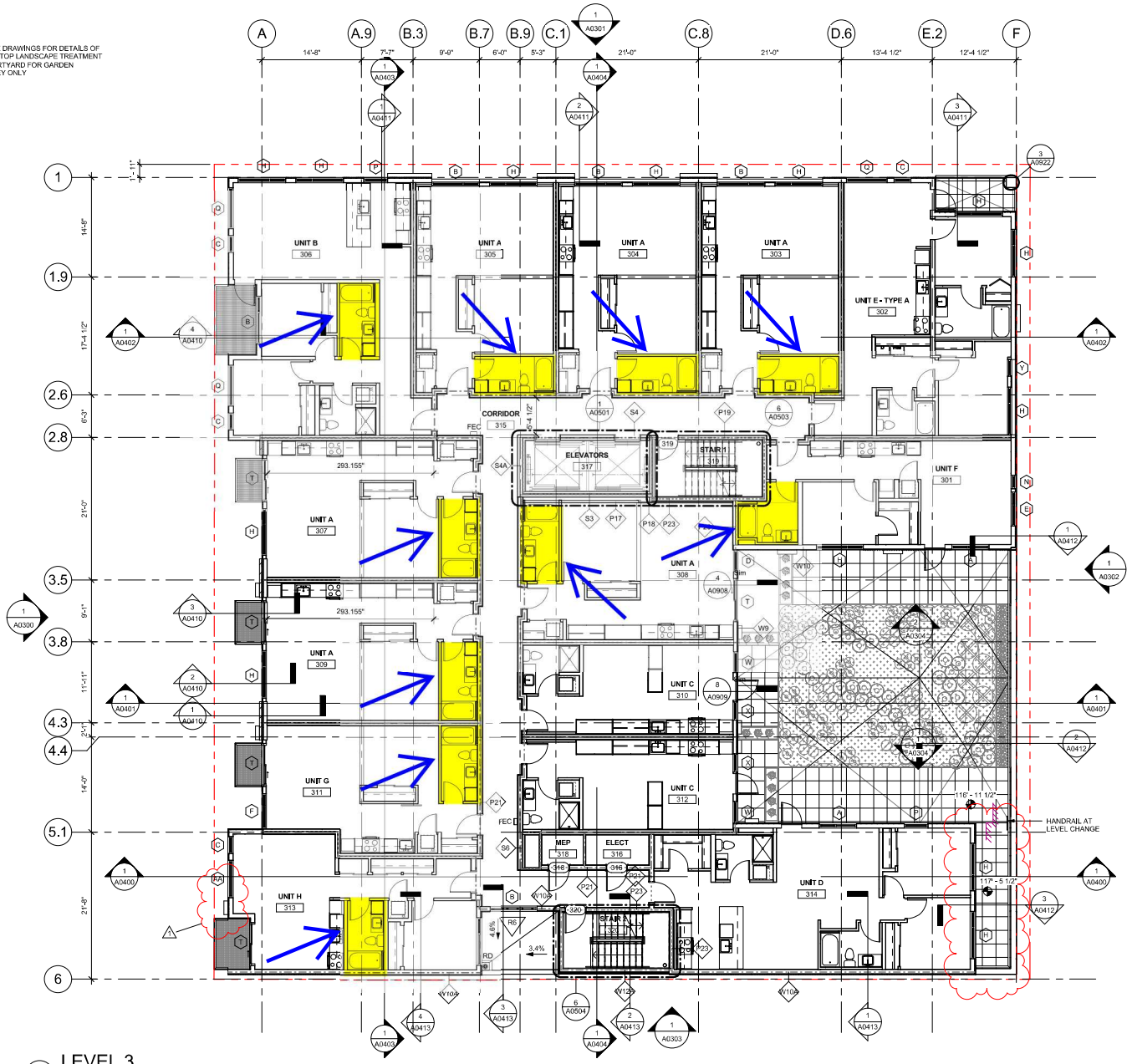

1 LEVEL 3
1/8" = 1'-0"

WALL LEGEND

- 1-HR FIRE PARTITION, SEE A1011
- 1-HR FIRE PARTITION, SEE A1011
- 2-HR FIRE BARRIER, SEE A1011
- 3-HR FIRE BARRIER, SEE A1011
- P1 — WALL ASSEMBLY TAG, SEE A1000
- P1 / C5 — STACKED WALL ASSEMBLY TAG

PLAN SYMBOLS

- FEC — FIRE EXTINGUISHER AND CABINET
- STACKED WASHING MACHINE & ELEC. DRYER. VENT DRYER TO EXTERIOR
- SIDE BY SIDE WASHING MACHINE AND ELEC. DRYER. INSTALL WASHER TO LEFT. VENT DRYER TO EXTERIOR
- BICYCLE RACK
- RESIDENT STORAGE LOCKER; TOP OF LOCKER MINIMUM 18" BELOW SPRINKLER DEFLECTOR
- ROOF DRAIN AND OVERFLOW, SEE PLUMBING
- GARAGE FLOOR DRAIN, SEE PLUMBING
- FD — FLOOR DRAIN, SEE PLUMBING
- ROOF ANCHOR
- ELASTOMERIC COATING PER BEE WP DWGS
- DS — DOWNSPOUT

GENERAL PLAN NOTES:

1. PROVIDE AND VERIFY A 4" CLR DIM BETWEEN ROUGH OPENING AND NEAREST PERPENDICULAR WALL @ ALL INTERIOR DOORS UNO

FIRE RESISTIVE CONSTRUCTION NOTES:

1. MECHANICAL, ELECTRICAL & PLUMBING SUB-CONTRACTORS TO COMPLY W/FIREBLOCKING & FIRE STOPPING REQUIREMENTS @ ALL PENETRATIONS OF RATED WALL, FLOOR-CEILING & ROOF-CEILING ASSEMBLIES.
2. ALL SEMI-RECESSED OR RECESSED FIRE EXTINGUISHER CABINETS SHALL BE UL LISTED FOR USE IN 1-HR OR 2-HR FIRE RESISTIVE CONSTRUCTION OR WRAP INSIDE OF STUD SPACE W/5/8" TYPE X GWB (FIRETAPED) IF ALLOWED BY GOVERNING BUILDING OFFICIAL/INSPECTOR.
3. SEE A0902 FOR ACOUSTIC DETAILS.

VIA Architecture | www.via-architecture.com
1809 7th Avenue Ste. 800 Seattle WA 98101
tel 206 284 5624 fax 206 624 5624

CONSULTANT

PROJECT
19 W Harrison
Seattle, WA 98119
76114

OWNER
19 W Harrison LLC

PROFESSIONAL SEAL
7888 REGISTERED ARCHITECT Alan Hart STATE OF WASHINGTON

DESIGN TEAM
JB
PRINCIPAL
JB
PROJECT MANAGER
PN
PROJECT ARCHITECT
PN
DRAWN BY
SM
CHECKED BY

DRAWING SET DESCRIPTION
ISSUED FOR CONSTRUCTION

REVISIONS

No.	DATE	DESCRIPTION
1	02/12/2016	POST-GMP REVISIONS

SHEET TITLE
LEVEL 3 FLOOR PLAN

SHEET NUMBER
A0203

ISSUE DATE
02.12.2016

ALL RIGHTS RESERVED BY VIA ARCHITECTURE INCORPORATED. THIS DESIGN IS NOT TO BE USED OR REPRODUCED WITHOUT THE CONSENT OF VIA ARCHITECTURE INCORPORATED.

DPD STAMP

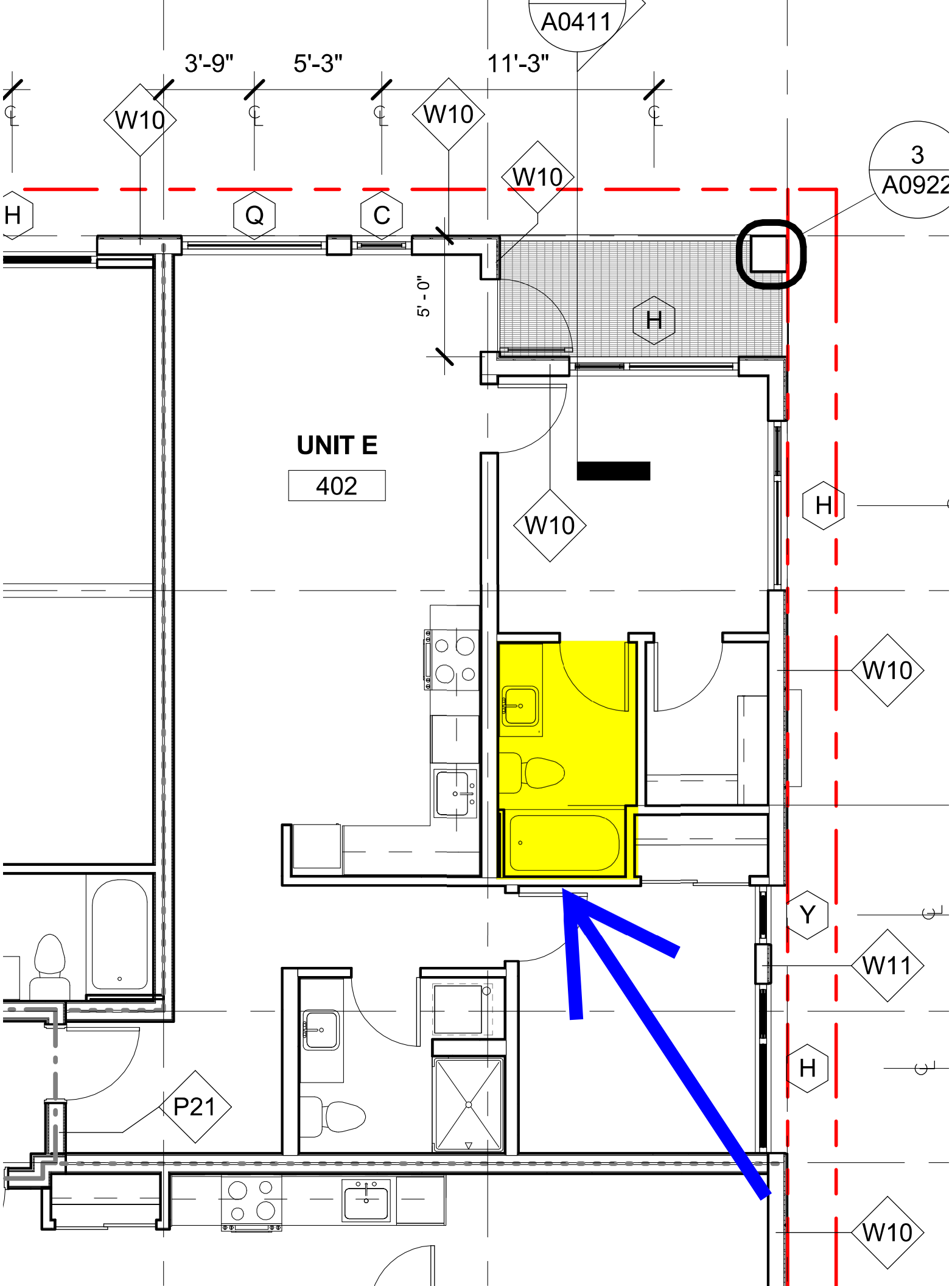
A0411
3'-9"
5'-3"
11'-3"
W10
W10
W10
3
A0922
H
Q
C
5' - 0"
H
UNIT E
402
W10
H
W10
Y
W11
H
P21
W10

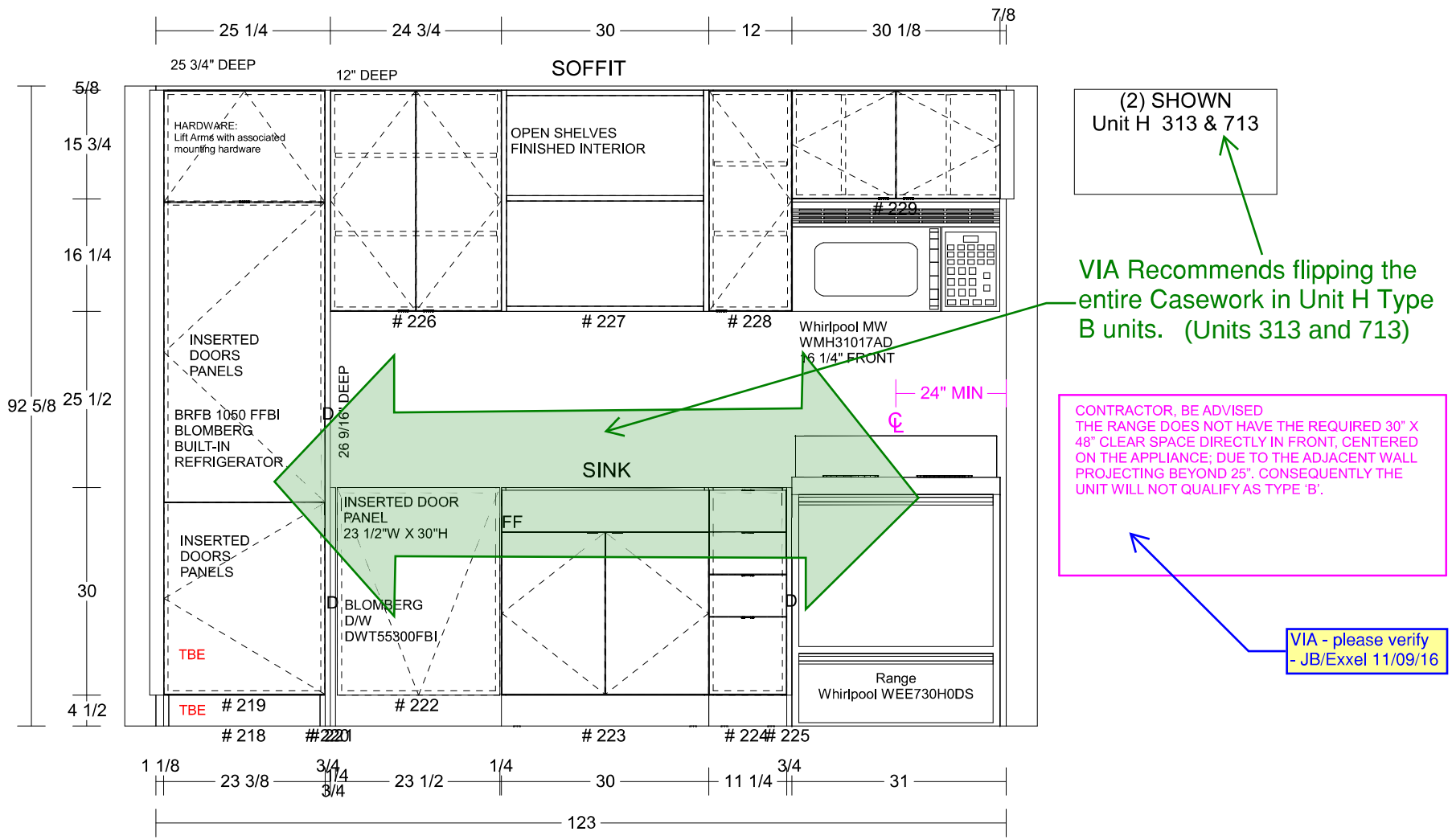

#	Unit Name	Width	Height	Depth	L.SCR	R.SCR
0	Range	30 1/8	42	28 7/8	0	0
218	TBE-REFER-BOX-15F1-R1	23 3/8	4 1/2	24	0	0
219	TBE S-FIS-REFERCABINET-15F1	23 3/8	87 1/2	25 3/4	0	0
220	T-Applied Door End-15F1-R1	3/4	92	26 9/16	0	0
221	B-Applied Door End-15F1-R1	3/4	34 1/2	24 13/16	0	0
222	B-DOORONLY-15F1-R1	23 1/2	30	24	0	0
223	B-2DOR1FF-SNK-15F1-R1	30	34 1/2	24	0	0
224	B-4DRW-15F1-R1	11 1/4	34 1/2	24	0	0
225	B-Applied Door Spacer-15F1-R1	3/4	34 1/2	24	0	0
226	U-2DOR-15F1	24 3/4	32	12	0	0
227	U-1DOR-15F1	30	32	12	0	0

362 363

Exxel Cora Rev C

Room #11 (Rm11 Unit H RefL) - Wall #2

E:\8 Job Files\Peled Barlev\Frameless\DEF\Exxel Cora\Exxel Cora Rev C.cvj

Date: 11/04/16

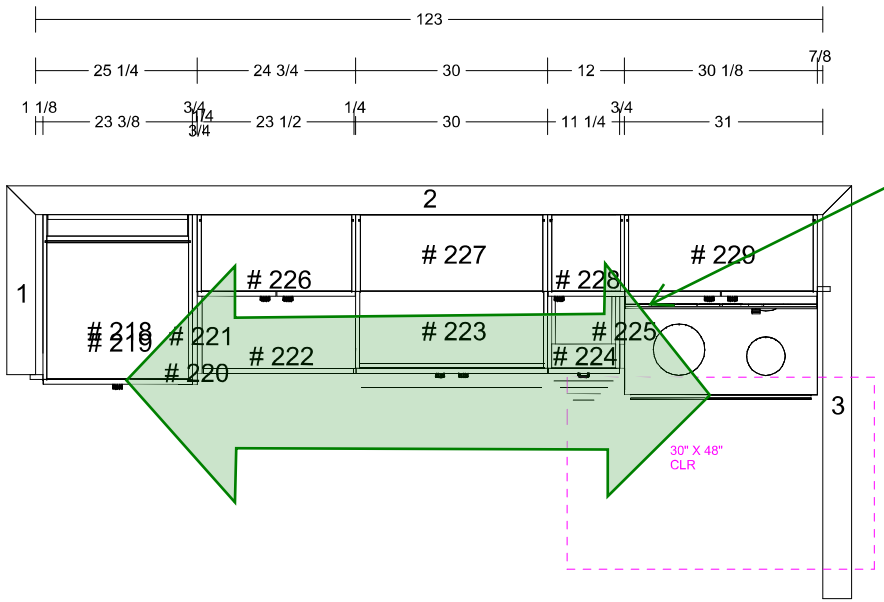

VIA Recommends flipping the entire Casework in Unit H Type B units. (Units 313 and 713)

CONTRACTOR, BE ADVISED
THE RANGE DOES NOT HAVE THE REQUIRED 30" X 48" CLEAR SPACE DIRECTLY IN FRONT, CENTERED ON THE APPLIANCE; DUE TO THE ADJACENT WALL PROJECTING BEYOND 25", CONSEQUENTLY THE UNIT WILL NOT QUALIFY AS TYPE 'B'.

VIA - please verify
- JB/Exxel 11/09/16

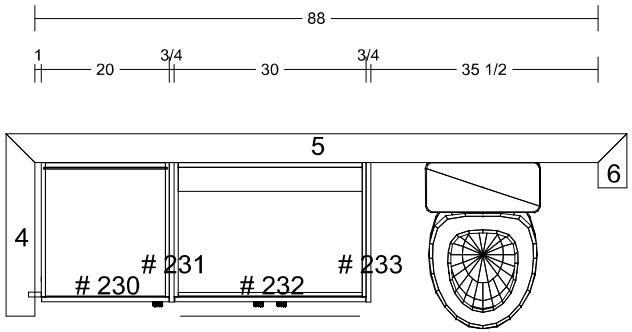

Rm11 Unit H RefL
(2) SHOWN
Room # 11
Unit H 313 & 713

Unit H	
313	
713	

LANZ TO FIELD VERIFY DIMENSIONS
If indicated, some units are mirrored to what is shown

Lanz CABINETS

DRAWN BY: PB	362 363	11/04/16
Construction method: Frameless-1mm App 15r1		
PROJECT Exxel Cora Rev C		

E:\8 Job Files\Peled Barlev\Frameless\DEF\Exxel Cora\Exxel Cora Rev C.cvj

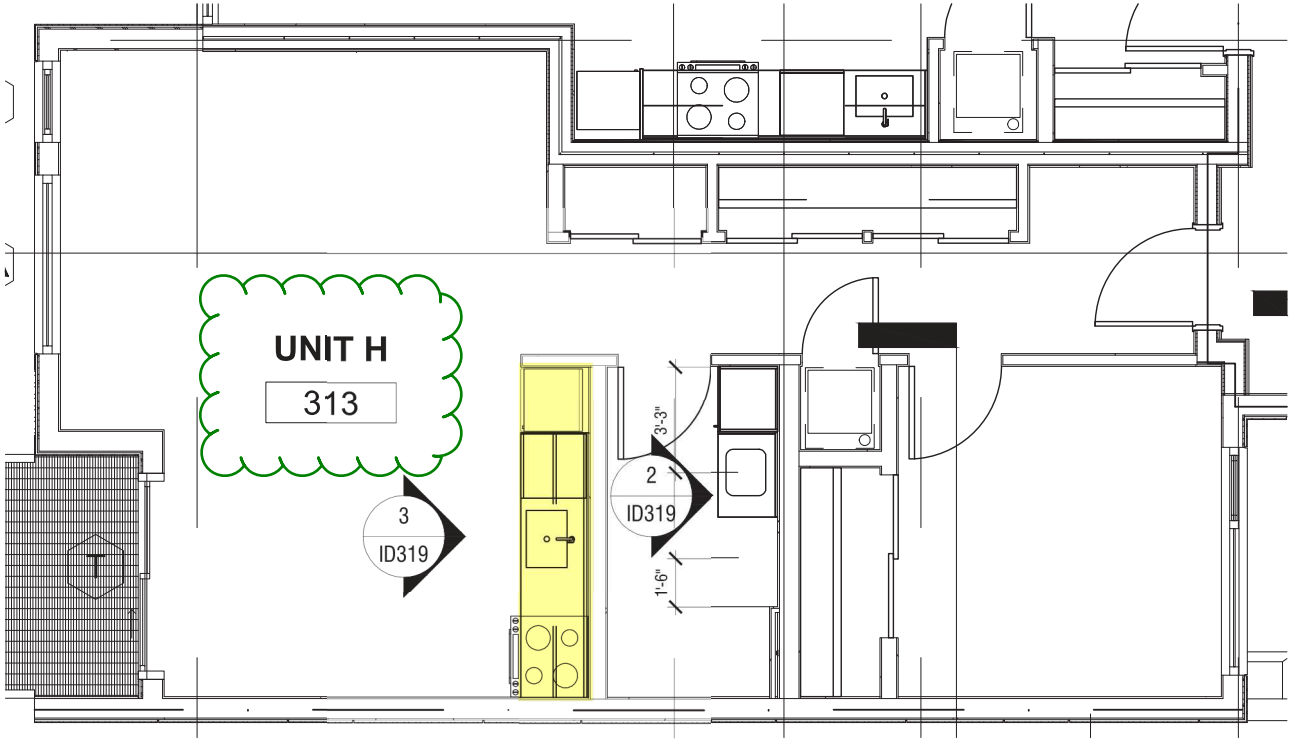

RESIDENTIAL UNIT H 1

PLAN 1/2"= 1'-0"

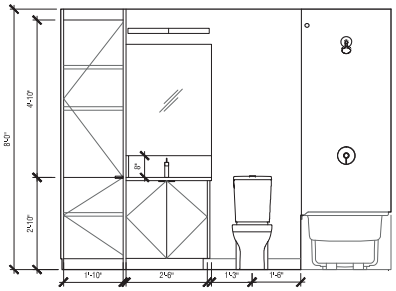

RESIDENTIAL UNIT H - BATH CASEWORK 2

ELEVATION 1/2"= 1'-0"

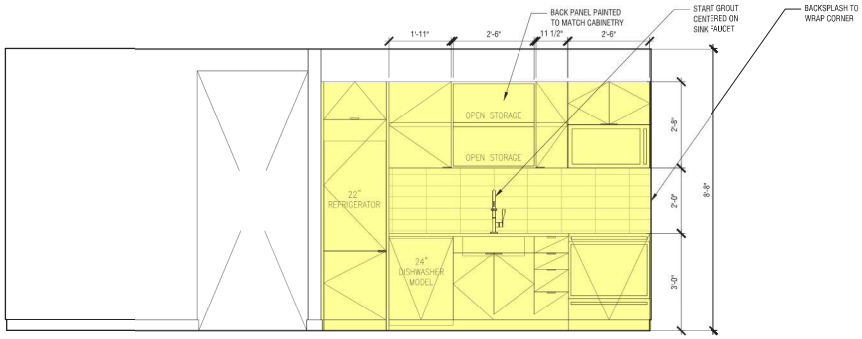

RESIDENTIAL UNIT H - KITCHEN CASEWORK 3

ELEVATION 1/2"= 1'-0"

COPYRIGHT 2015 JENNIE GRUSS

JENNIE GRUSS
Jennie Gruss Interior Design, Inc
1419 South Jackson Street, Suite 11
Seattle, WA 98144
jennie@jenniegruss.com 1 347 446 7540

PROJECT:

19 W. HARRISON, LLC
19 WEST HARRISON
SEATTLE, WA 98119

1501 HARRISON

19 WEST HARRISON
SEATTLE, WA 98119

date:
05 FEBRUARY 2016
FOR CONSTRUCTION

drawn by:
ALC

scale:
1/2" = 1'-0"

title:
INTERIOR ELEVATIONS

number:
ID319

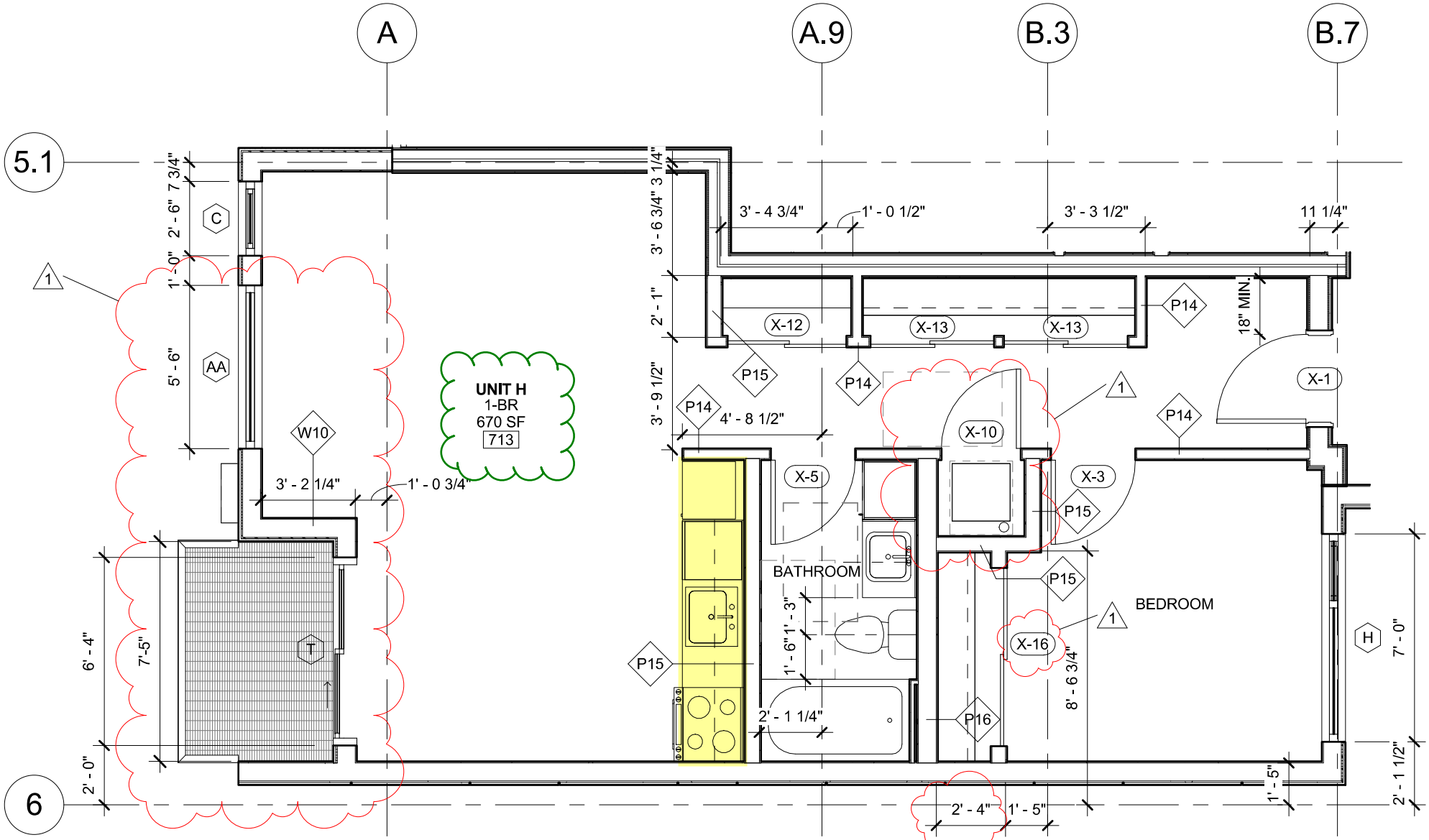

UNIT H

2

1/4" = 1'-0"

TYPE B

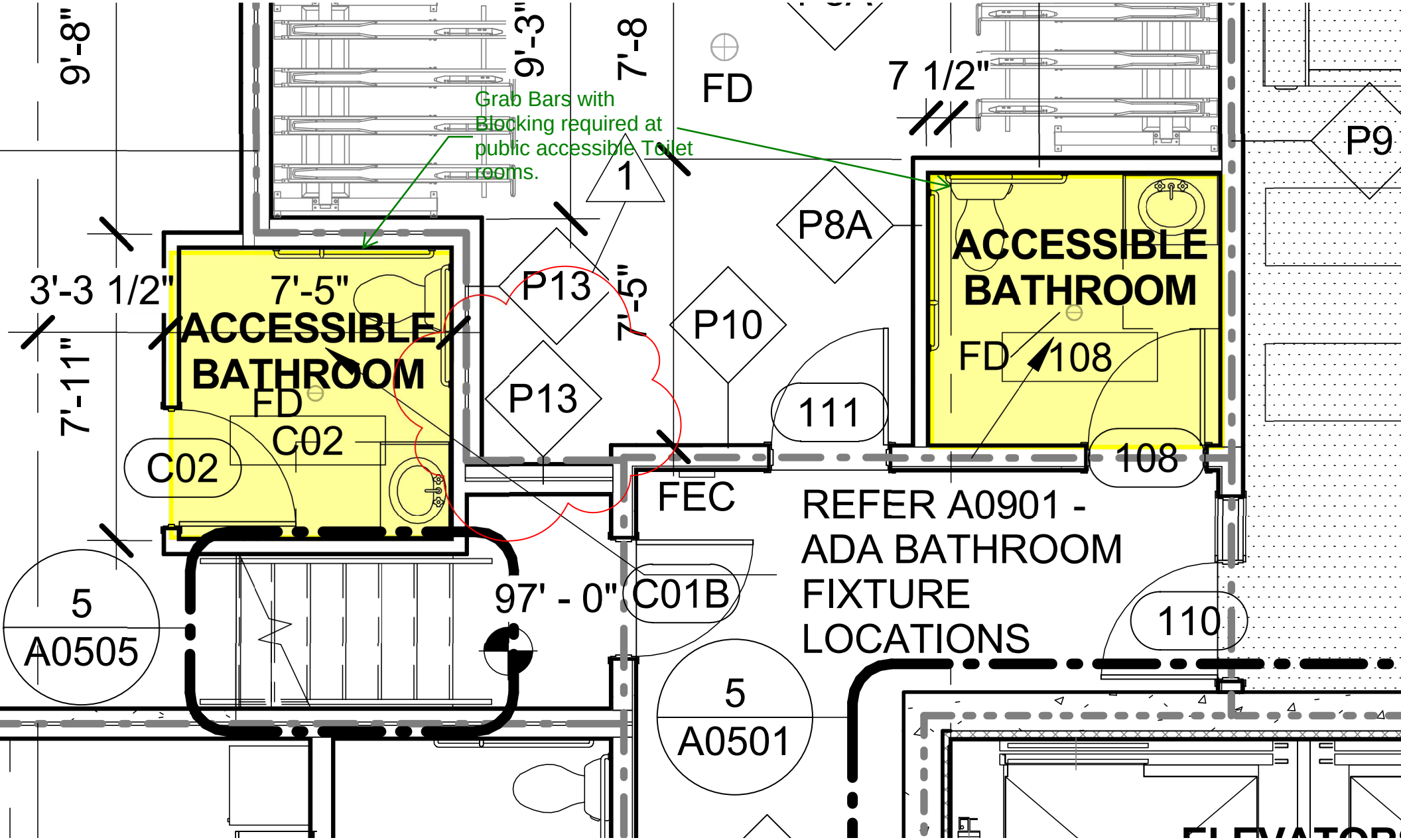
9'-8"
9'-3"
7'-8
FD
7 1/2"
Grab Bars with
Blocking required at
public accessible Toilet
rooms.
P9
1
P8A
ACCESSIBLE
BATHROOM
FD
108
3'-3 1/2"
7'-5"
ACCESSIBLE
BATHROOM
FD
C02
C02
P13
7'-5"
P10
P13
111
108
7'-11"
FEC
REFER A0901 -
ADA BATHROOM
FIXTURE
LOCATIONS
5
A0505
97' - 0"
C01B
110
5
A0501

Grab Bars with Blocking required at public accessible Toilet rooms.

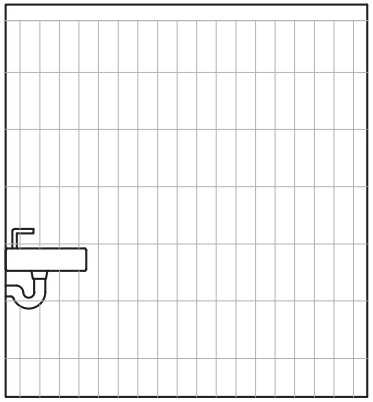

ADA WC 6

ELEVATION 1/2"= 1'-0"

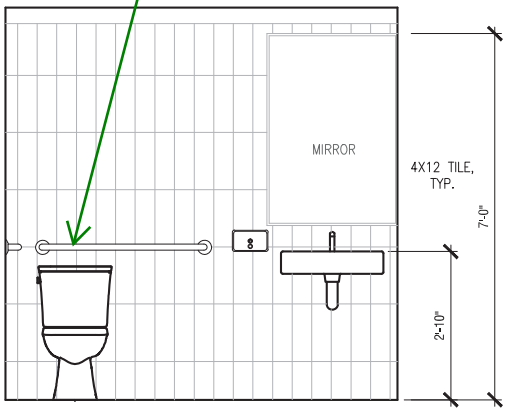

ADA WC 7

ELEVATION 1/2"= 1'-0"

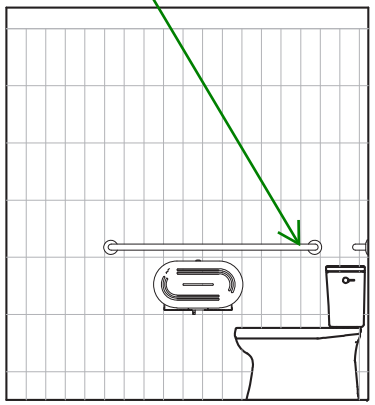

ADA WC 8

ELEVATION 1/2"= 1'-0"

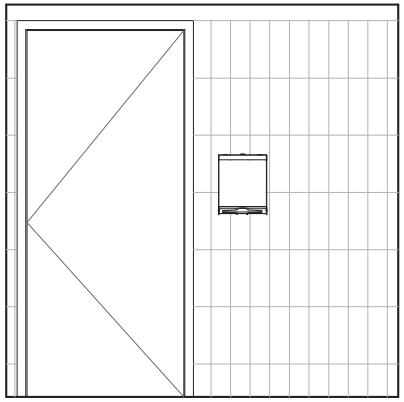

ADA WC 9

ELEVATION 1/2"= 1'-0"

GHT 2015 JENNIE GRUSS

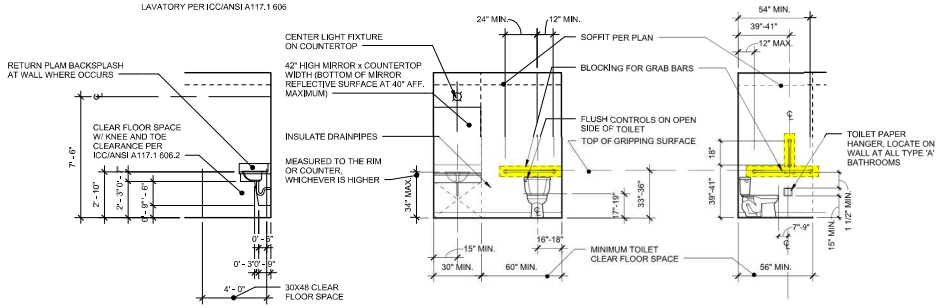

1 TYPICAL ACCESSIBLE BATHROOM FIXTURE LOCATIONS

1/4" = 1'-0"

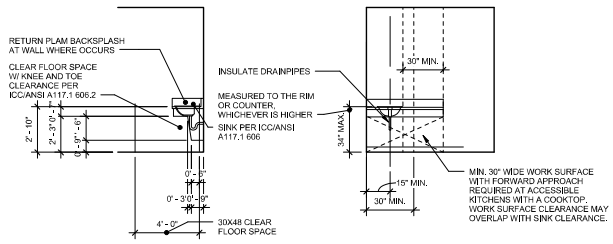

2 TYPICAL ACCESSIBLE KITCHEN FIXTURE LOCATIONS

1/4" = 1'-0"

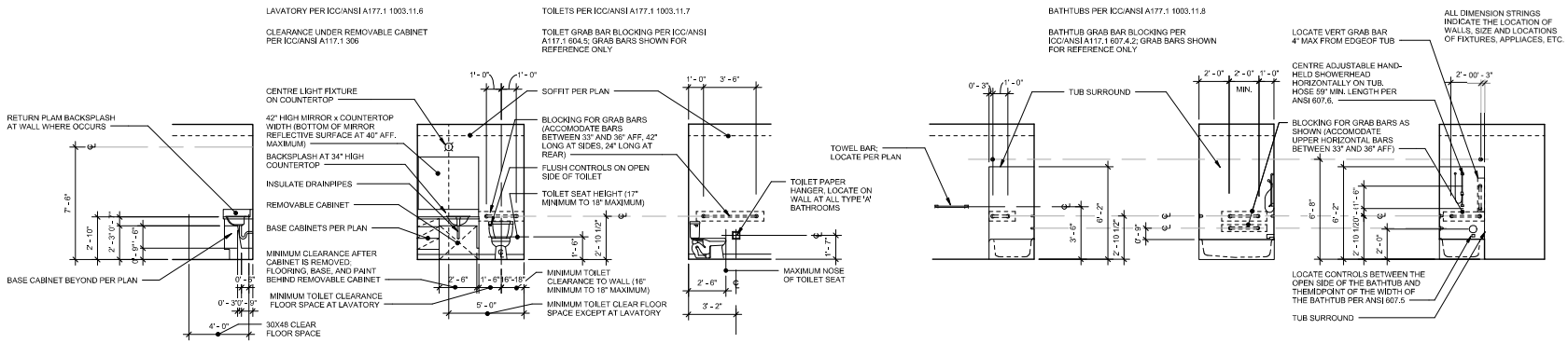

3 TYPICAL TYPE "A" BATHROOM FIXTURE LOCATIONS

1/4" = 1'-0"

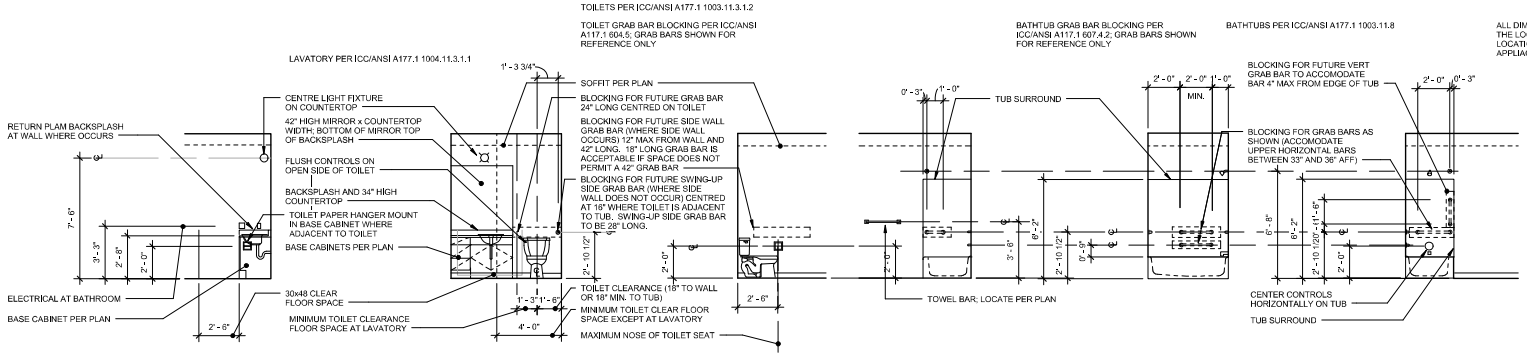

4 TYPICAL TYPE "B" (OPTION A&B) BATHROOM FIXTURE LOCATIONS

1/4" = 1'-0"

VIA Architecture | www.via-architecture.com
1809 7th Avenue Ste. 800 Seattle WA 98101
tel 206 284 5624 fax 206 624 5624

CONSULTANT

PROJECT
19 W Harrison

Seattle, WA 98119
76114

OWNER
19 W Harrison LLC

PROFESSIONAL SEAL
7888 REGISTERED ARCHITECT Alan Hart STATE OF WASHINGTON

DESIGN TEAM
JB
PRINCIPAL
JB
PROJECT MANAGER
PN
PROJECT ARCHITECT
PN
DRAWN BY
SM
CHECKED BY

DRAWING SET DESCRIPTION
ISSUED FOR CONSTRUCTION

REVISIONS

No.	DATE	DESCRIPTION

SHEET TITLE
ADA BATHROOM FIXTURE LOCATIONS

SHEET NUMBER
A0901

ISSUE DATE
02.12.2016

ALL RIGHTS RESERVED BY VIA ARCHITECTURE INCORPORATED. THIS DESIGN IS NOT TO BE USED OR REPRODUCED WITHOUT THE CONSENT OF VIA ARCHITECTURE INCORPORATED.

DPD STAMP